## NOTES

STIRRUPS IN CAP MAY BE SHIFTED AS NECESSARY TO CLEAR DOWELS.

THE CONCRETE IN THE SHADED AREA OF THE WING SHALL BE POURED AFTER THE VERTICAL CONCRETE BARRIER RAIL IS CAST IF SLIP FORMING IS USED.

FOR PILE SPLICE DETAILS, SEE SHEET 4 OF 8.

FOR WING DETAILS, SEE SHEET 3 OF 8.

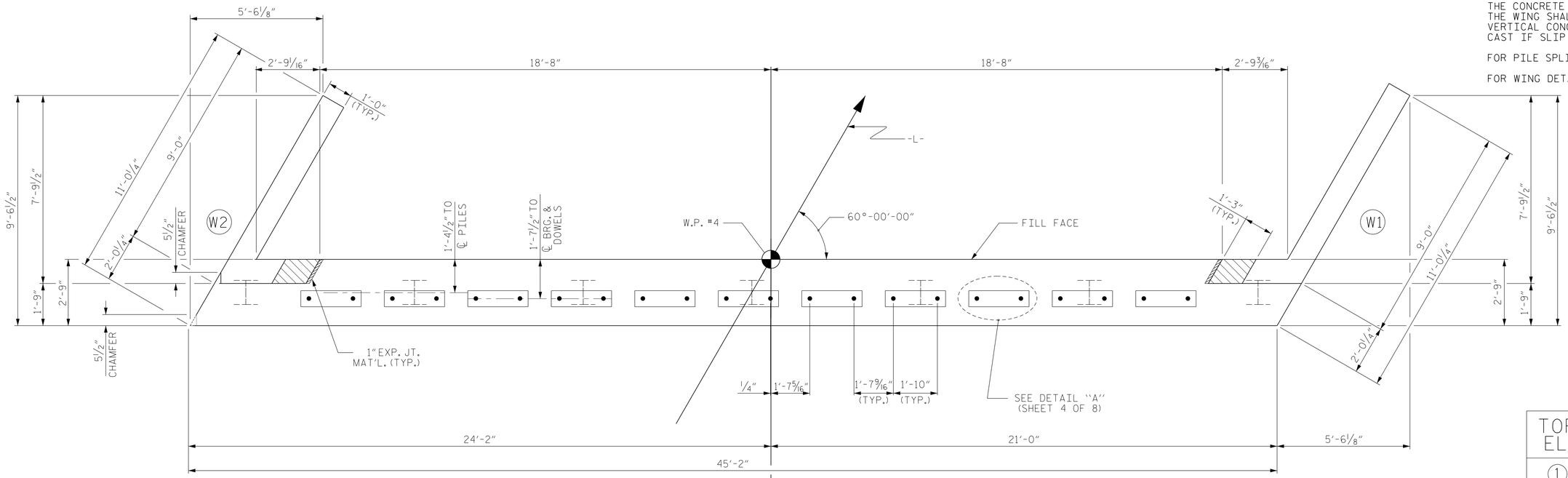


PLAN

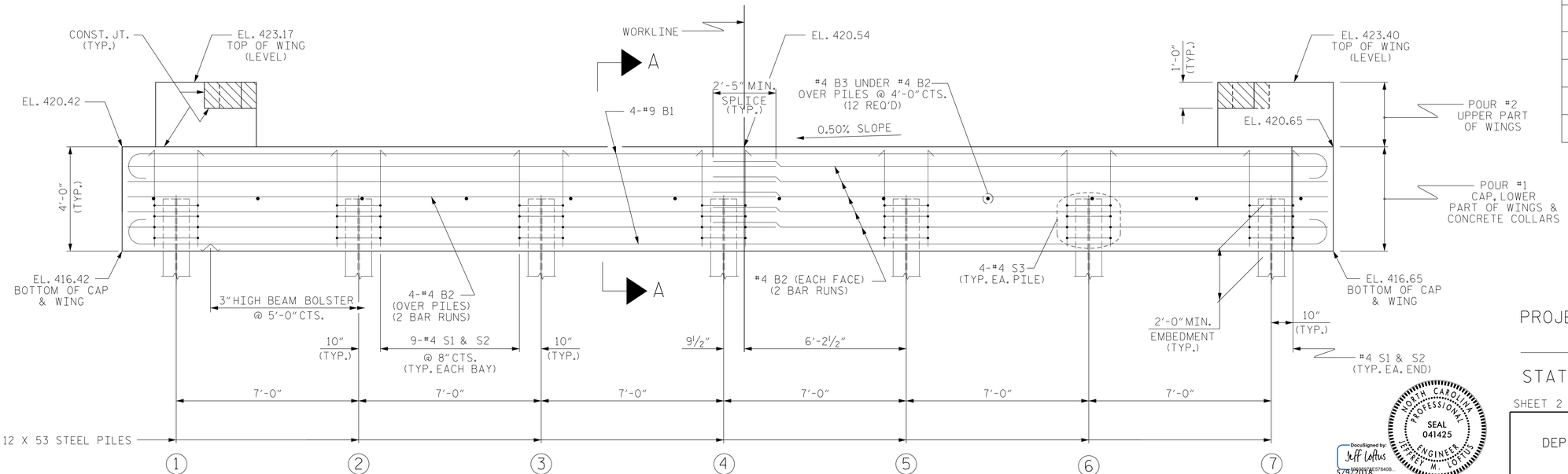


ELEVATION

WINGS NOT SHOWN FOR CLARITY.
FOR SECTION A-A, SEE SHEET 4 OF 8.
CONCRETE COLLARS FOR STEEL PILES NOT SHOWN IN PLAN AND ELEVATION VIEWS FOR CLARITY.
SEE "CORROSION PROTECTION FOR STEEL PILES DETAIL", SHEET 4 OF 8.

| TOP OF PILE ELEVATIONS | |
|---|---|
| 1 | 418.43 |
| 2 | 418.47 |
| 3 | 418.50 |
| 4 | 418.54 |
| 5 | 418.57 |
| 6 | 418.61 |
| 7 | 418.64 |

0.50% SLOPE

PROJECT NO. B-5145

PERSON COUNTY

STATION: 14+50.00 -L-

SHEET 2 OF 8

NORTH CAROLINA PROFESSIONAL SEAL 041425 ENGINEER JEFFREY M. LOFTUS

DocuSigned by: Jeff Loftus 5/9/2018

DOCUMENT NOT CONSIDERED FINAL UNLESS ALL SIGNATURES COMPLETED

STATE OF NORTH CAROLINA
DEPARTMENT OF TRANSPORTATION
RALEIGH

SUBSTRUCTURE

END BENT No. 2


STEWART
Firm License No. C-1051
421 Fayetteville St,
Suite 400
Raleigh, NC 27601
T 919.380.8750
www.stewartinc.com


| REVISIONS | | | | | | | | SHEET NO. |
|---|---|---|---|---|---|---|---|---|
| NO. | BY: | DATE: | NO. | BY: | DATE: | | | S-13 |
| 1 | | | 3 | | | | | TOTAL SHEETS |
| 2 | | | 4 | | | | | 22 |

| | | | |
|---|---|---|---|
| DRAWN BY: | J. LOFTUS | DATE : | 6/17 |
| CHECKED BY: | E. PHELPS | DATE : | 9/17 |
| DESIGN ENGINEER OF RECORD: | J. LOFTUS | DATE : | 10/17 |

4/17/2018
...\400_013_B5145_SMU_SUB02.dgn
USER:jloftus

R 2707C_SITE 3

STD. NO. EB_33_60S4