PROJECT REFERENCE NO.	SHEET NO.
B-5145	2A-1

ROADWAY DESIGN ENGINEER
NORTH CAROLINA PROFESSIONAL SEAL 034407 ENGINEER ANDREW P. YOUNG
DocuSigned by: Andrew P. Young 5/17/2018
EF21D93DD62F4EF

PAVEMENT DESIGN ENGINEER
NORTH CAROLINA PROFESSIONAL SEAL 22896 ENGINEER CLARK S. MORRISON
DocuSigned by: Clark Morrison 5/18/2018
B0A110DD1E004C4...

STEWART
firm license No. C-1051
421 Fayetteville St.
Suite 400
Raleigh, NC 27601
T 919.380.8750
www.stewartinc.com

DOCUMENT NOT CONSIDERED FINAL UNLESS ALL SIGNATURES COMPLETED

PAVEMENT SCHEDULE

(FINAL PAVEMENT DESIGN)

C1	PROP. APPROX. 3″ ASPHALT CONCRETE SURFACE COURSE, TYPE S9.5B, AT AN AVERAGE RATE OF 165 LBS. PER SQ. YD. IN EACH OF TWO LAYERS.
C2	PROP. APPROX. 1½″ ASPHALT CONCRETE SURFACE COURSE, TYPE S9.5B, AT AN AVERAGE RATE OF 165 LBS. PER SQ. YD.
C3	PROP. VAR. DEPTH ASPHALT CONCRETE SURFACE COURSE, TYPE S9.5B, AT AN AVERAGE RATE OF 110 LBS. PER SQ. YD. PER 1″ DEPTH. TO BE PLACED IN LAYERS NOT TO EXCEED 1½″ IN DEPTH.
D1	PROP. APPROX. 4″ ASPHALT CONCRETE INTERMEDIATE COURSE, TYPE I19.0C, AT AN AVERAGE RATE OF 456 LBS. PER SQ. YD.
D2	PROP. VAR. DEPTH ASPHALT CONCRETE INTERMEDIATE COURSE, TYPE I19.0C, AT AN AVERAGE RATE OF 114 LBS. PER SQ. YD. PER 1″ DEPTH, TO BE PLACED IN LAYERS NOT LESS THAN 2½″ IN DEPTH OR GREATER THAN 4″ IN DEPTH.
E1	PROP. APPROX. 4″ ASPHALT CONCRETE BASE COURSE, TYPE B25.0C, AT AN AVERAGE RATE OF 456 LBS. PER SQ. YD.
R	SHOULDER BERM GUTTER
T	EARTH MATERIAL
U	EXISTING PAVEMENT
W	WEDGING (SEE THIS SHEET FOR WEDGING DETAIL)

NOTE: PAVEMENT EDGE SLOPES ARE 1:1, UNLESS SHOWN OTHERWISE

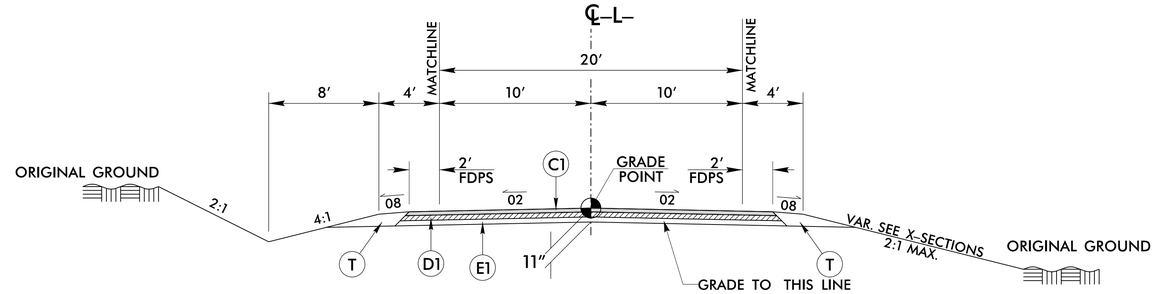

TYPICAL SECTION NO. 1

–L– STA. 10+50.00 TO –L– STA. 13+43.56 (BEGIN BRIDGE)
–L– STA. 15+56.44 (END BRIDGE) TO –L– STA. 18+50.00

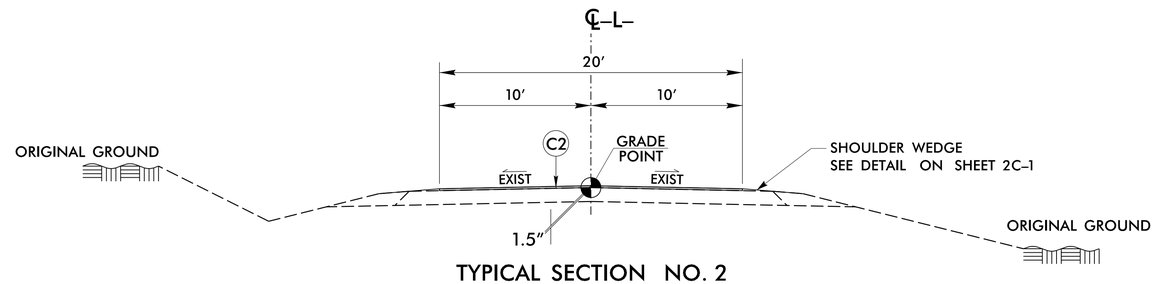

TYPICAL SECTION NO. 2

OVERLAY EXISTING ROADWAY BETWEEN B-5145 & B-5322
APPROX. LENGTH = 315 FEET (B-5145)
APPROX. LENGTH = 315 FEET (B-5322)

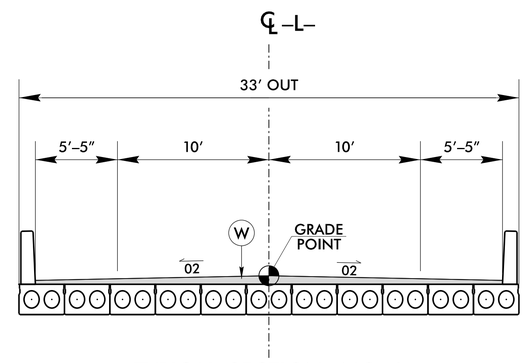

TYPICAL SECTION NO. 3

–L– STA. 13+43.56 TO –L– STA. 15+56.44

NOTE: SEE STRUCTURE PLANS FOR PAVEMENT DEPTHS ON STRUCTURE

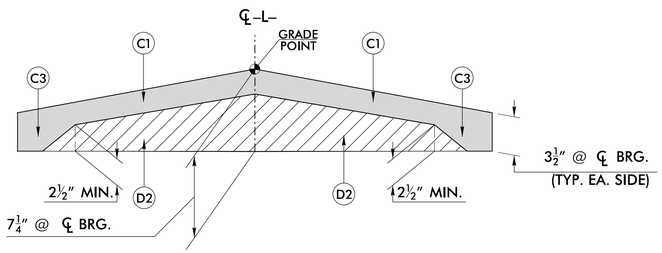

DETAIL SHOWING METHOD OF WEDGING ON BRIDGE

USE IN CONJUNCTION WITH BRIDGE TYPICAL SECTION

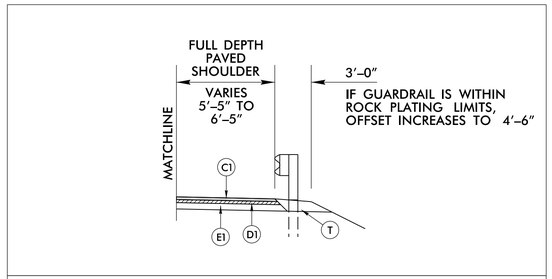

DETAIL SHOWING PAVING TO THE FACE OF GUARDRAIL

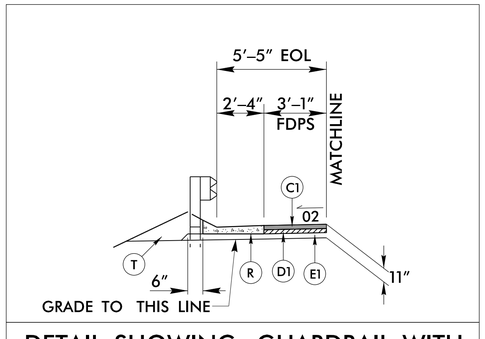

DETAIL SHOWING GUARDRAIL WITH SHOULDER BERM GUTTER

USE SHOULDER BERM GUTTER AT THE FOLLOWING LOCATIONS:
–L– STA. 13+05.00 TO –L– STA. 13+27.23 (BEGIN APPROACH SLAB) (LEFT)
–L– STA. 13+05.00 TO –L– STA. 13+41.90 (BEGIN APPROACH SLAB) (RIGHT)

REVISIONS

5/14/99

5/17/2018
I:\Roadway\Proj\B5145_Rdy_typ.dgn
USER:Rbowling