T.I.P.: B-5145

CONTRACT:

TIP NO.	SHEET NO.
B-5145	PMP-1

APPROVED: DocuSigned by: Andrew P. Young EF21D93DD62F4EF...

DATE: 5/9/2018

SEAL:

NORTH CAROLINA PROFESSIONAL SEAL 034407 ENGINEER ANDREW P. YOUNG

DOCUMENT NOT CONSIDERED FINAL UNLESS ALL SIGNATURES COMPLETED

STATE OF NORTH CAROLINA
DEPARTMENT OF TRANSPORTATION

PAVEMENT MARKING PLAN

PERSON COUNTY

LOCATION: BRIDGE NO. 50 OVER SOUTH HYCO CREEK ON SR 1343 (JOHN BREWER RD.)

ROADWAY STANDARD DRAWING

THE FOLLOWING ROADWAY STANDARDS AS APPEAR IN "ROADWAY STANDARD DRAWINGS" - PROJECT SERVICES UNIT - N.C. DEPARTMENT OF TRANSPORTATION - RALEIGH, N.C., DATED JANUARY 2018 ARE APPLICABLE TO THIS PROJECT AND BY REFERENCE HEREBY ARE CONSIDERED A PART OF THESE PLANS:

STD. NO.	TITLE
1205.01	PAVEMENT MARKINGS - LINE TYPES AND OFFSETS
1205.02	PAVEMENT MARKINGS - TWO-LANE AND MULTILANE ROADWAYS
1205.12	PAVEMENT MARKINGS - BRIDGES
1250.01	RAISED PAVEMENT MARKERS - INSTALLATION SPACING
1251.01	RAISED PAVEMENT MARKERS - PERMANENT AND TEMPORARY
1261.01	GUARDRAIL AND BARRIER DELINEATORS - INSTALLATION SPACING
1261.02	GUARDRAIL AND BARRIER DELINEATORS - TYPES AND MOUNTING
1262.01	GUARDRAIL END DELINEATION

PAVEMENT MARKING SCHEDULE

SYMBOL	DESCRIPTION
PA	PAINT WHITE EDGELINE (4") X2
PI	PAINT YELLOW DOUBLE CENTER (4") X2
MA	YELLOW & YELLOW, PERMANENT RAISED PAVEMENT MARKERS

GENERAL NOTES

THE FOLLOWING GENERAL NOTES APPLY AT ALL TIMES FOR THE DURATION OF THE CONSTRUCTION PROJECT, EXCEPT WHEN OTHERWISE NOTED IN THE PLAN, OR DIRECTED BY THE ENGINEER.

A) INSTALL PAVEMENT MARKINGS AND PAVEMENT MARKERS ON THE FINAL SURFACE AS FOLLOWS:

ROAD NAME	MARKING	MARKER
JOHN BREWER RD.	PAINT	RAISED

B) TIE PROPOSED PAVEMENT MARKING LINES TO EXISTING PAVEMENT MARKING LINES.

C) REMOVE/REPLACE ANY CONFLICTING/DAMAGED PAVEMENT MARKINGS.

CONTINUE PROPOSED PAVEMENT MARKINGS FROM END OF TIP PROJECT B-5145 AND TIE TO PROPOSED PAVEMENT MARKINGS AT BEGINNING OF TIP PROJECT B-5322.

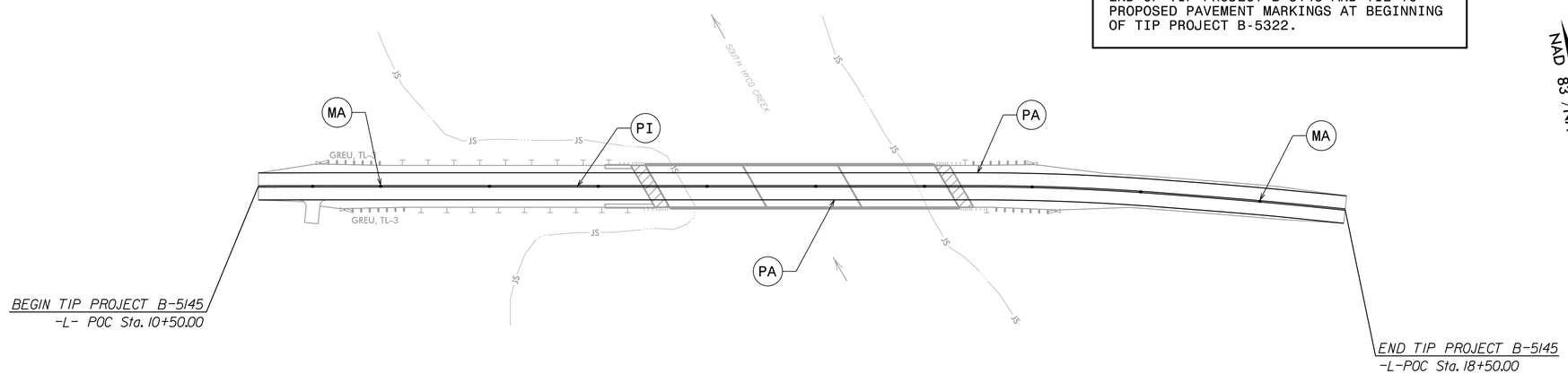

RAISED PAVEMENT MARKERS

TYP. SPACING	BEGIN STA.	END STA.
80'	10+50 +/-	18+50 +/-

PLAN PREPARED BY: STEWART

ANDY YOUNG, PE	PROJECT ENGINEER
ELIZABETH PHELPS, EI	PROJECT DESIGN ENGINEER

STEWART
Firm License No. C-1051
421 Fayetteville St.
Suite 400
Raleigh, NC 27601
T 919.380.8750
www.stewartinc.com

5/9/2018
...\TCP\B5145_TC_PMP_01.dgn
USER:ajoung