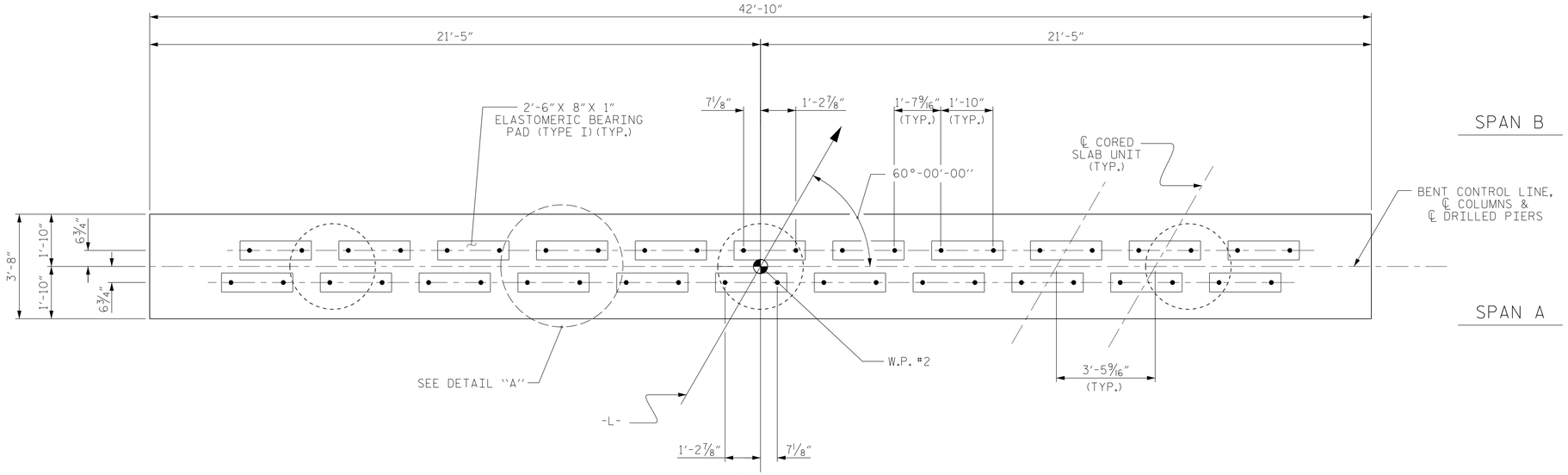

PLAN

NOTES

STIRRUPS IN CAP MAY BE SHIFTED AS NECESSARY TO CLEAR DOWELS.

HOOKS ON "M" BARS MAY BE TURNED AS NECESSARY FOR PLACING REINFORCING STEEL.

SPLICING OF THE LONGITUDINAL BARS IN THE DRILLED PIER WILL NOT BE PERMITTED.

FOR DRILLED PIERS, SEE SECTION 411 OF THE STANDARD SPECIFICATIONS.

ALL STEEL IN THE DRILLED PIERS IS INCLUDED IN THE PAY ITEMS FOR "REINFORCING STEEL" AND "SPIRAL COLUMN REINFORCING STEEL."

★ INVERT ALTERNATE STIRRUPS.

DRILLED PIERS SHALL BE TERMINATED ONE FOOT ± ABOVE NORMAL WATER SURFACE ELEVATION FOR SHAFTS LOCATED IN WATER.

THE CONTRACTOR'S ATTENTION IS CALLED TO THE FACT THAT THE LONGITUDINAL REINFORCEMENT FOR DRILLED PIERS IS DETAILED WITH 3 FEET OF EXTRA LENGTH.

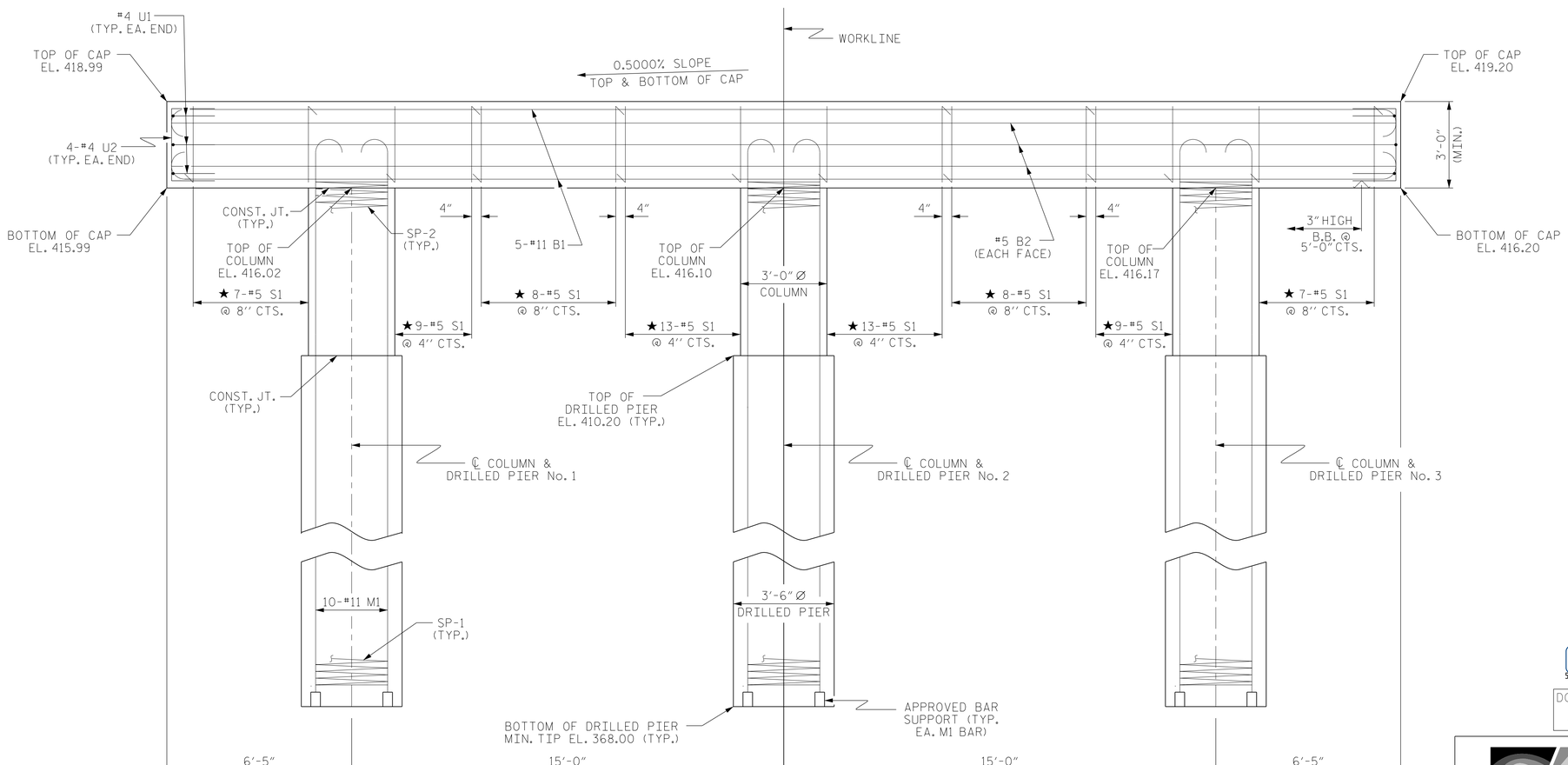

ELEVATION

DIMENSIONS & REINFORCING STEEL ARE TYPICAL FOR EACH COLUMN & DRILLED PIER UNLESS OTHERWISE NOTED.

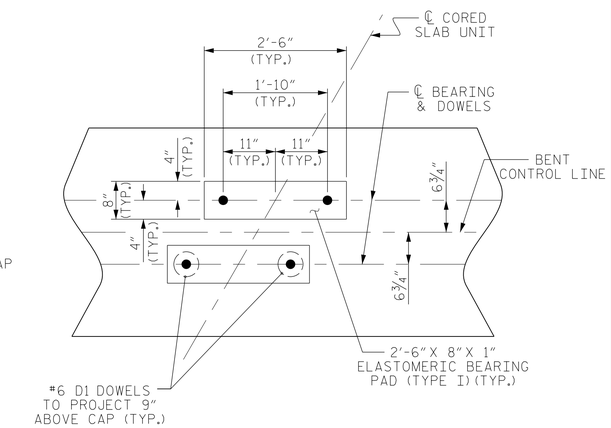

DETAIL "A"

(DIMENSIONS ARE TYPICAL EACH BEARING)

PROJECT NO. B-5145

PERSON COUNTY

STATION: 14+50.00 -L-

SHEET 5 OF 8

STATE OF NORTH CAROLINA
DEPARTMENT OF TRANSPORTATION
RALEIGH

SUBSTRUCTURE
BENT No. 1

NORTH CAROLINA PROFESSIONAL SEAL 041425 ENGINEER JEFFREY M. LOFTUS

DocuSigned by: Jeff Loftus
5/9/2018

DOCUMENT NOT CONSIDERED FINAL UNLESS ALL SIGNATURES COMPLETED

STEWART
Firm License No. C-1051
421 Fayetteville St,
Suite 400
Raleigh, NC 27601
T 919.380.8750
www.stewartinc.com

REVISIONS						SHEET NO.
NO.	BY:	DATE:	NO.	BY:	DATE:	S-16
1			3			TOTAL SHEETS
2			4			22

DRAWN BY:	J. LOFTUS	DATE :	6/17
CHECKED BY:	E. PHELPS	DATE :	9/17
DESIGN ENGINEER OF RECORD:	J. LOFTUS	DATE :	10/17

R 2707C_SITE 3

4/17/2018
...\400_016_B5145_SMU_SUB05.dgn
USER:jloftus