NOTES :

FOR BERM WIDTH DIMENSIONS, SEE GENERAL DRAWING.

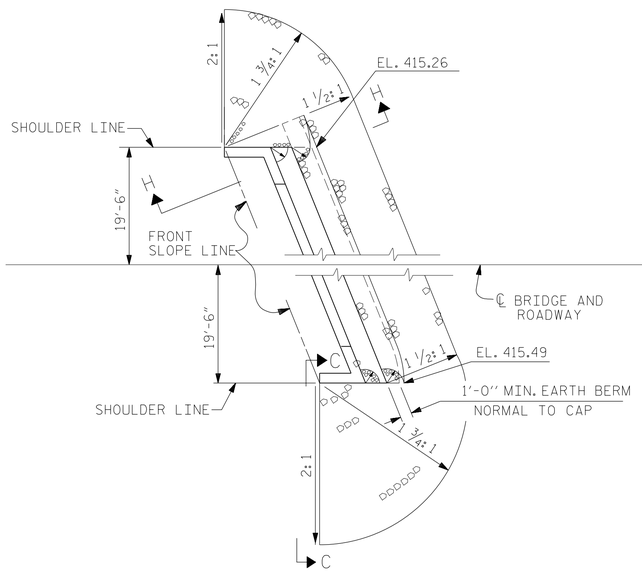

END BENT NO. 1

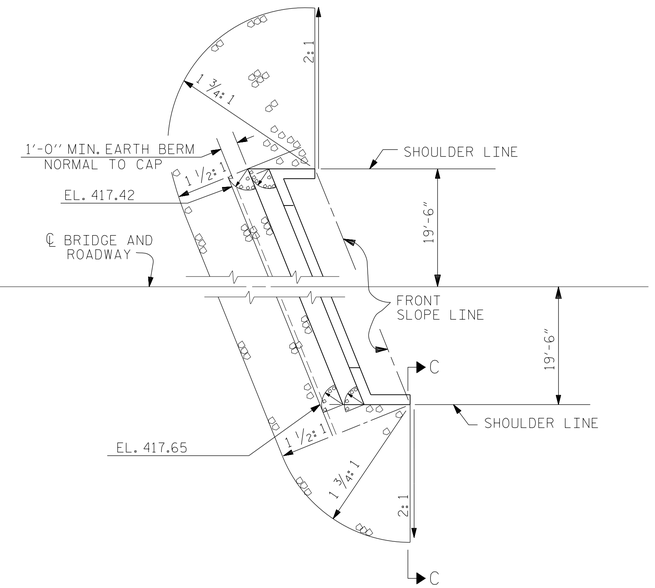

END BENT NO. 2

ESTIMATED QUANTITIES		
BRIDGE @ STA. 14+50.00 -L-	RIP RAP CLASS II (2'-0" THICK)	GEOTEXTILE FOR DRAINAGE
	TONS	SQUARE YARDS
END BENT 1	108	120
END BENT 2	115	127

PLAN OF RIP RAP

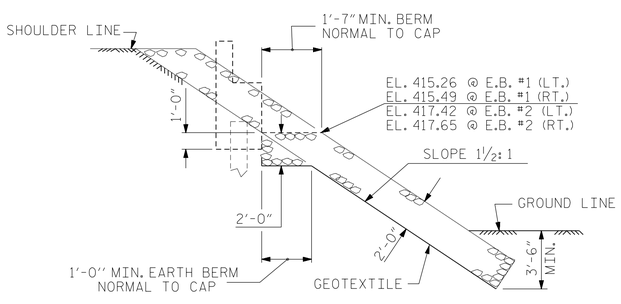

SECTION H-H

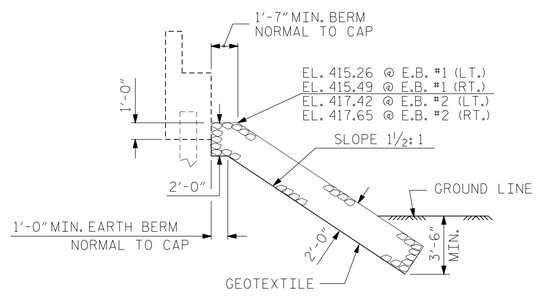

℄ SECTION

BERM RIP RAPPED

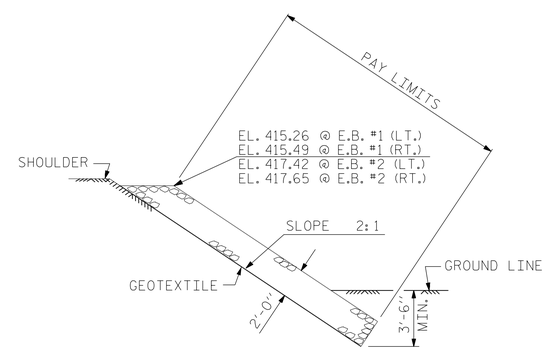

SECTION C-C

PROJECT NO. B-5145

PERSON COUNTY

STATION: 14+50.00 -L-

NORTH CAROLINA PROFESSIONAL SEAL 041425 ENGINEER JEFFREY M. LOFTUS

DocuSigned by: Jeff Loftus 5/9/2018

DOCUMENT NOT CONSIDERED FINAL UNLESS ALL SIGNATURES COMPLETED

STEWART

Firm License No. C-1051
421 Fayetteville St,
Suite 400
Raleigh, NC 27601
T 919.380.8750
www.stewartinc.com

STATE OF NORTH CAROLINA
DEPARTMENT OF TRANSPORTATION
RALEIGH

STANDARD

RIP RAP DETAILS

REVISIONS						SHEET NO.
NO.	BY:	DATE:	NO.	BY:	DATE:	S-20
1			3			TOTAL SHEETS
2			4			22

DRAWN BY:	J. LOFTUS	DATE :	6/17
CHECKED BY:	E. PHELPS	DATE :	9/17
DESIGN ENGINEER OF RECORD:	J. LOFTUS	DATE :	10/17

4/17/2018
...\400_020_B5145_SMU_RR01.dgn
USER:jloftus

R 2707C_SITE 3

STD. NO. RR1 (Sht 1)