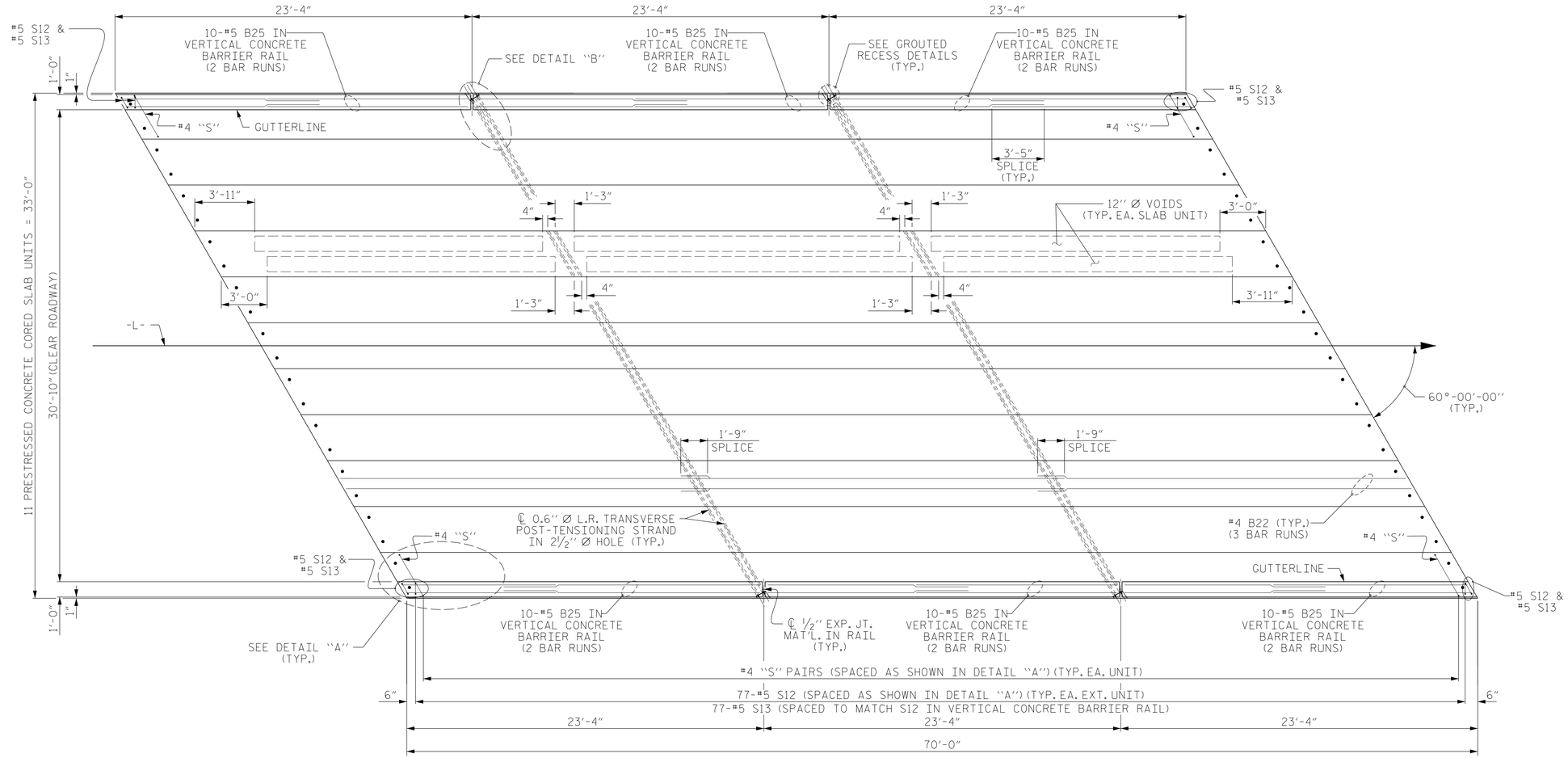


## PLAN OF SPAN A

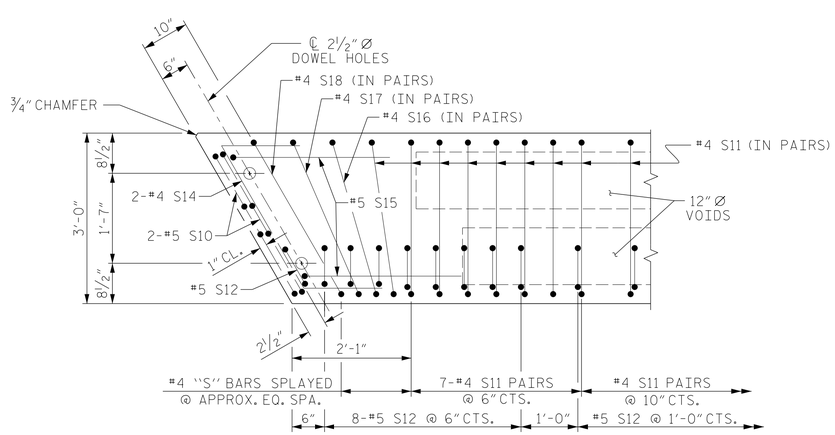


## DETAIL "A"

(SIMILAR EACH END OF UNIT)
NOTE: EXTERIOR UNIT SHOWN - INTERIOR
UNIT SIMILAR EXCEPT OMIT #5 S12 BARS.

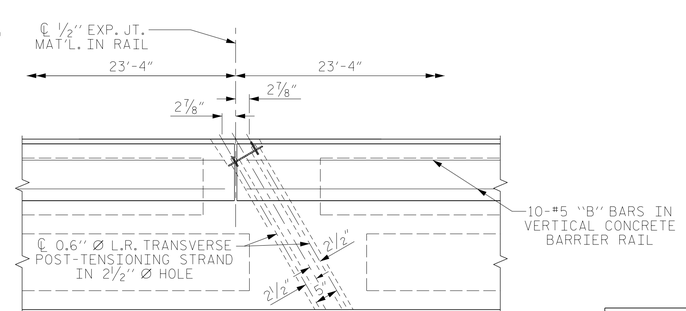


## DETAIL "B"

#4 S11 BARS MAY BE SHIFTED AS NECESSARY
TO MAINTAIN 1" CLEAR TO GROUTED RECESS AND
2½" Ø TRANSVERSE POST-TENSIONING STRAND HOLES

PROJECT NO. B-5145
PERSON COUNTY
STATION: 14+50.00 -L-

SHEET 2 OF 6

NORTH CAROLINA PROFESSIONAL SEAL 041425 ENGINEER JEFFREY M. LOFTUS

DocuSigned by: Jeff Loftus
5/9/2018

DOCUMENT NOT CONSIDERED
FINAL UNLESS ALL
SIGNATURES COMPLETED

STEWART
Firm License No. C-1051
421 Fayetteville St,
Suite 400
Raleigh, NC 27601
T 919.380.8750
www.stewartinc.com

STATE OF NORTH CAROLINA
DEPARTMENT OF TRANSPORTATION
RALEIGH

# SPAN A
# PLAN OF 70' UNIT
# 30'-10" CLEAR ROADWAY
# 60° SKEW

| REVISIONS | | | | | | SHEET NO. |
|---|---|---|---|---|---|---|
| NO. | BY: | DATE: | NO. | BY: | DATE: | S-6 |
| 1 | | | 3 | | | TOTAL SHEETS |
| 2 | | | 4 | | | 22 |

DRAWN BY: J. LOFTUS DATE: 6/17
CHECKED BY: E. PHELPS DATE: 9/17
DESIGN ENGINEER OF RECORD: J. LOFTUS DATE: 10/17

4/17/2018
...\400_006_B5145_SMU_SUP02.dgn
USER:jloftus

R 2707C_SITE 3

STD. NO. 24PCS_33_60S_70L