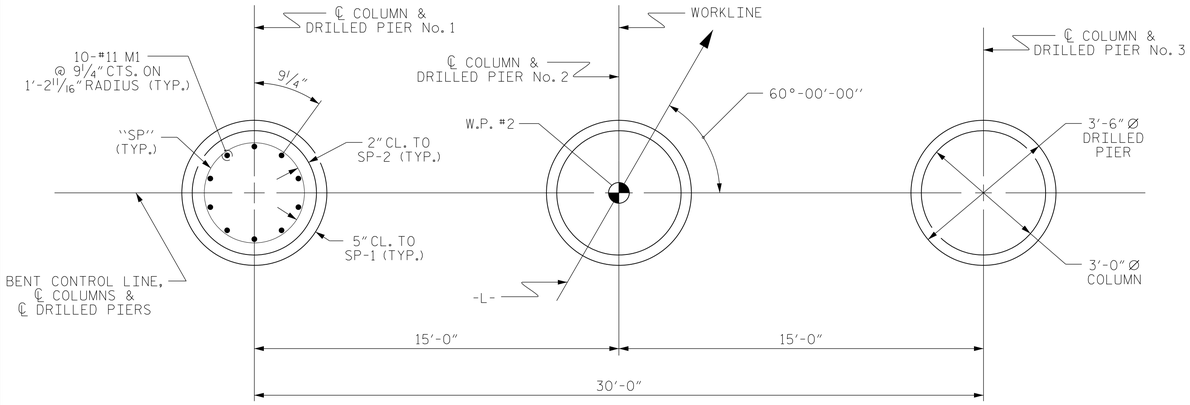

PLAN OF DRILLED PIERS & COLUMNS

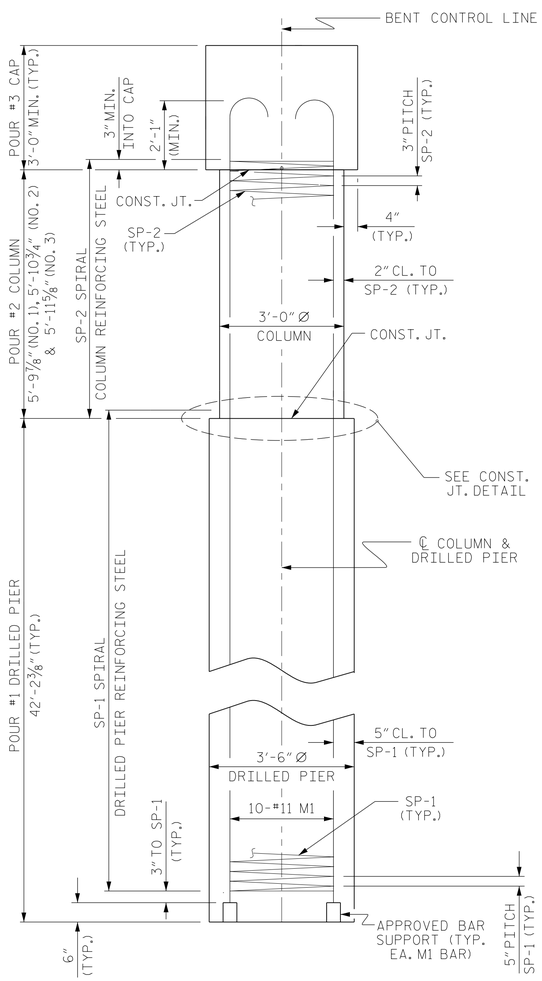

END ELEVATION

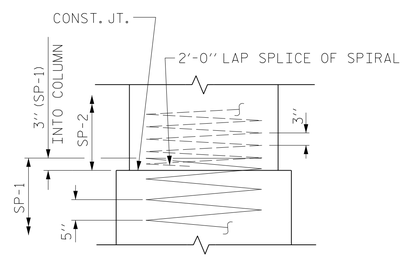

CONSTRUCTION JOINT DETAIL

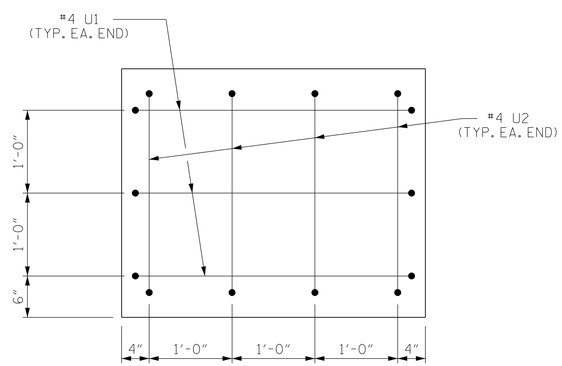

END OF CAP VIEW

(TYPICAL BOTH ENDS)

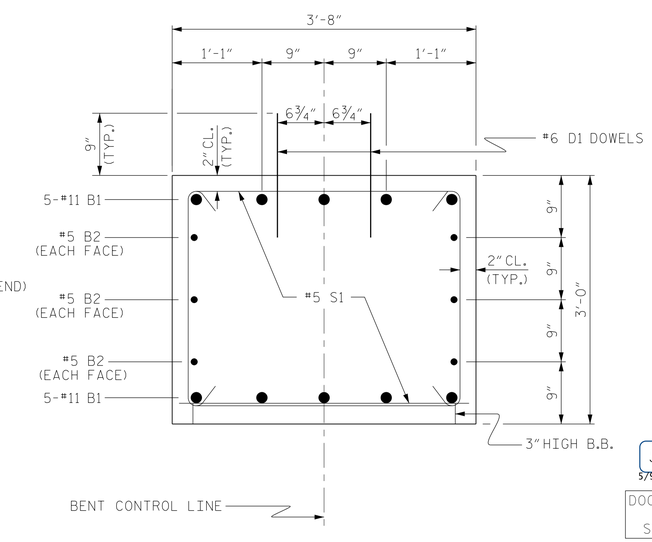

SECTION THRU CAP

BAR TYPES

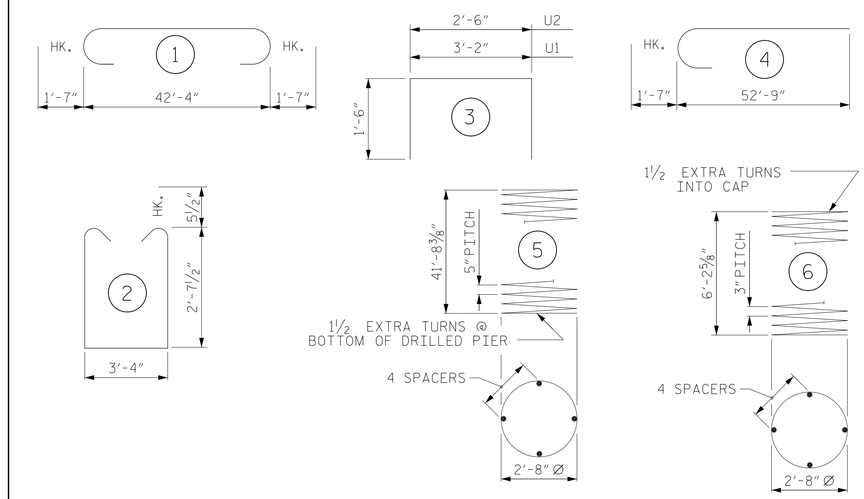

ALL BAR DIMENSIONS ARE OUT TO OUT

BILL OF MATERIAL

FOR ONE BENT

BAR	NO.	SIZE	TYPE	LENGTH	WEIGHT
B1	10	#11	1	45'-6"	2417
B2	6	#5	STR	42'-6"	266
D1	44	#6	STR	1'-6"	99
M1	30	#11	4	54'-4"	8660
S1	74	#5	2	9'-6"	733
U1	6	#4	3	6'-2"	25
U2	8	#4	3	5'-6"	29

REINFORCING STEEL (FOR ONE BENT) 12,229 LBS.

SP-1	3	*	5	835'-5"	2614
SP-2	3	**	6	217'-8"	436

SPIRAL COLUMN REINFORCING STEEL (FOR ONE BENT) 3,050 LBS.

* THE SP-1 SPIRAL REINFORCING STEEL SHALL BE W31 OR D-31 COLD DRAWN WIRE OR #5 PLAIN OR DEFORMED BAR

** THE SP-2 SPIRAL REINFORCING STEEL SHALL BE W20 OR D-20 COLD DRAWN WIRE OR #4 PLAIN OR DEFORMED BAR

CLASS A CONCRETE BREAKDOWN (FOR ONE BENT)

POUR #2 (COLUMNS)	4.7 C.Y.
POUR #3 (CAP)	17.5 C.Y.
TOTAL CLASS A CONCRETE	22.2 C.Y.

DRILLED PIERS: (FOR ONE BENT)

DRILLED PIER CONCRETE	
POUR #1 (DRILLED PIERS)	45.2 C.Y.
3'-6" Ø DRILLED PIER NOT IN SOIL	25 LIN. FT.
3'-6" Ø DRILLED PIER IN SOIL	101.6 LIN. FT.
PERMANENT STEEL CASING FOR 3'-6" Ø DRILLED PIER	105.6 LIN. FT.
CSL TUBES	524.4 LIN. FT.

PROJECT NO. B-5145

PERSON COUNTY

STATION: 14+50.00 -L-

SHEET 6 OF 8

STATE OF NORTH CAROLINA
DEPARTMENT OF TRANSPORTATION
RALEIGH

SUBSTRUCTURE

BENT No. 1

NORTH CAROLINA PROFESSIONAL SEAL 041425 ENGINEER JEFFREY M. LOFTUS

DocuSigned by: Jeff Loftus 5/9/2018

DOCUMENT NOT CONSIDERED FINAL UNLESS ALL SIGNATURES COMPLETED

STEWART

Firm License No. C-1051
421 Fayetteville St,
Suite 400
Raleigh, NC 27601
T 919.380.8750
www.stewartinc.com

REVISIONS						SHEET NO.
NO.	BY:	DATE:	NO.	BY:	DATE:	S-17
1			3			TOTAL SHEETS
2			4			22

DRAWN BY:	J. LOFTUS	DATE : 6/17
CHECKED BY:	E. PHELPS	DATE : 9/17
DESIGN ENGINEER OF RECORD:	J. LOFTUS	DATE : 10/17

4/17/2018
...\400_017_B5145_SMU_SUB06.dgn
USER:jloftus

R 2707C_SITE 3