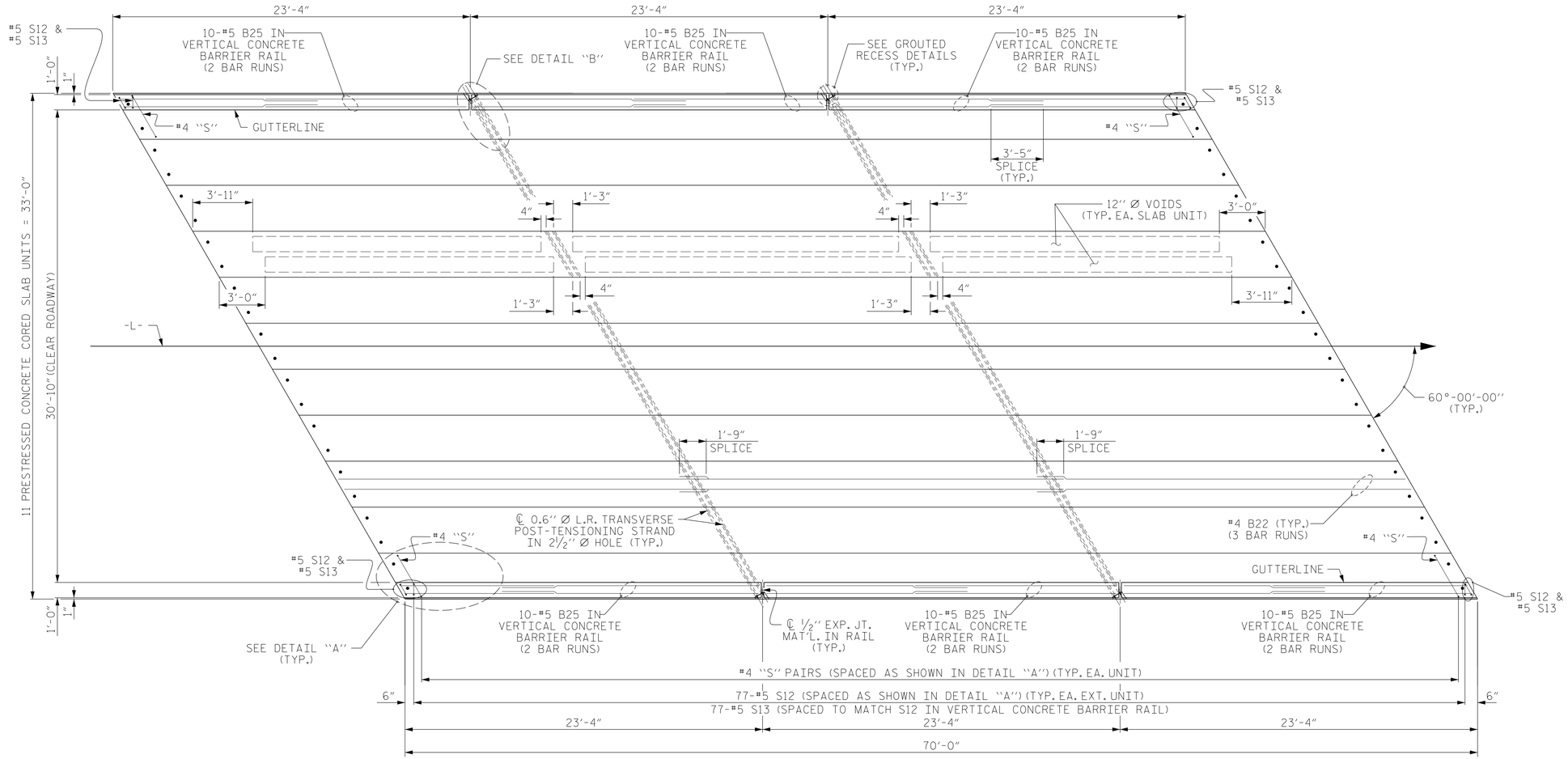

PLAN OF SPAN B

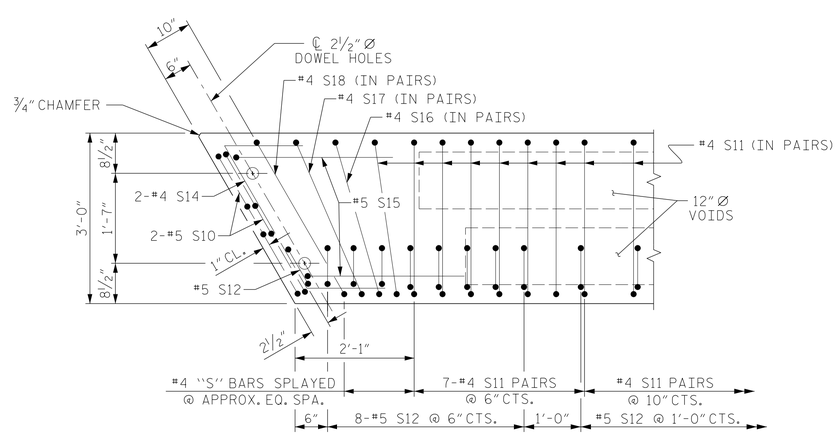

DETAIL "A"

(SIMILAR EACH END OF UNIT)
NOTE: EXTERIOR UNIT SHOWN - INTERIOR
UNIT SIMILAR EXCEPT OMIT #5 S12 BARS.

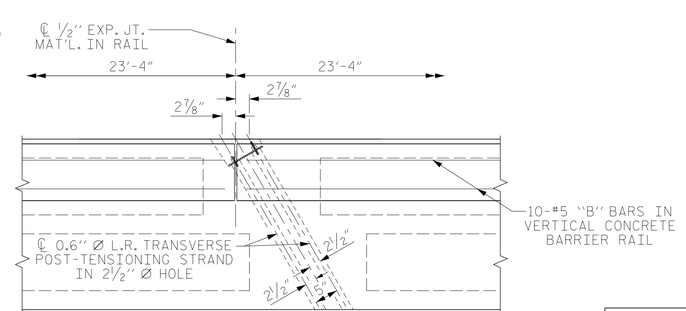

DETAIL "B"

#4 S11 BARS MAY BE SHIFTED AS NECESSARY
TO MAINTAIN 1" CLEAR TO GROUTED RECESS AND
2½" Ø TRANSVERSE POST-TENSIONING STRAND HOLES

PROJECT NO. B-5145
PERSON COUNTY
STATION: 14+50.00 -L-

SHEET 3 OF 6

NORTH CAROLINA PROFESSIONAL SEAL 041425 ENGINEER JEFFREY M. LOFTUS

DocuSigned by: Jeff Loftus
5/9/2018

DOCUMENT NOT CONSIDERED
FINAL UNLESS ALL
SIGNATURES COMPLETED

STEWART
Firm License No. C-1051
421 Fayetteville St,
Suite 400
Raleigh, NC 27601
T 919.380.8750
www.stewartinc.com

STATE OF NORTH CAROLINA
DEPARTMENT OF TRANSPORTATION
RALEIGH

SPAN B
PLAN OF 70' UNIT
30'-10" CLEAR ROADWAY
60° SKEW

REVISIONS						SHEET NO.
NO.	BY:	DATE:	NO.	BY:	DATE:	S-7
1			3			TOTAL SHEETS
2			4			22

DRAWN BY: J. LOFTUS DATE: 6/17
CHECKED BY: E. PHELPS DATE: 9/17
DESIGN ENGINEER OF RECORD: J. LOFTUS DATE: 10/17

4/17/2018
...\400_007_B5145_SMU_SUP03.dgn
USER: jloftus

R 2707C_SITE 3

STD. NO. 24PCS_33_60S_70L